REV	ECN	DESCRIPTION	DATE	DRAWN	APPROVED

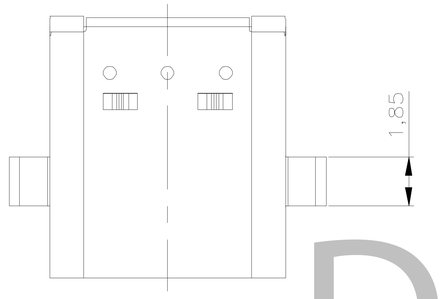

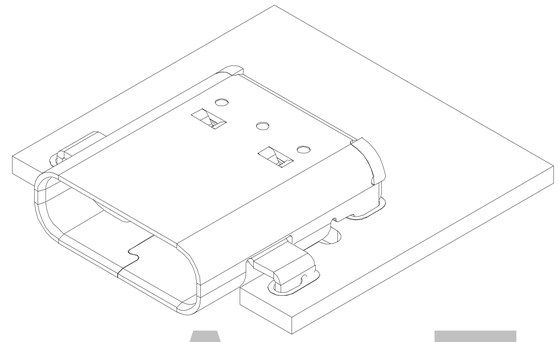

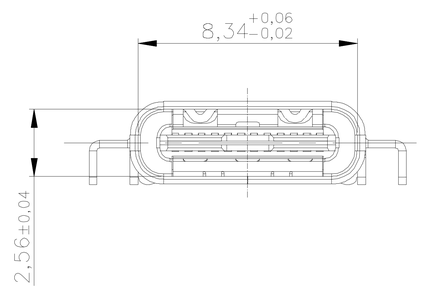

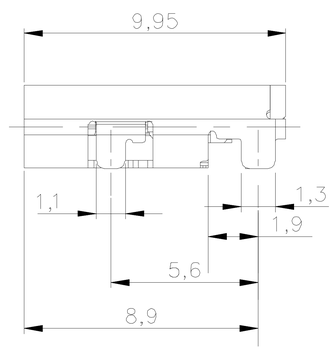

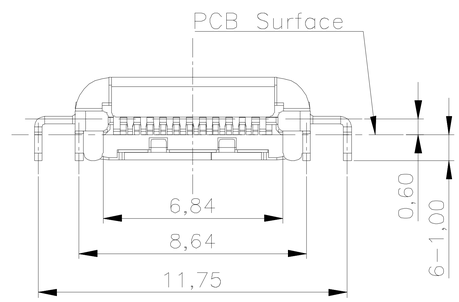

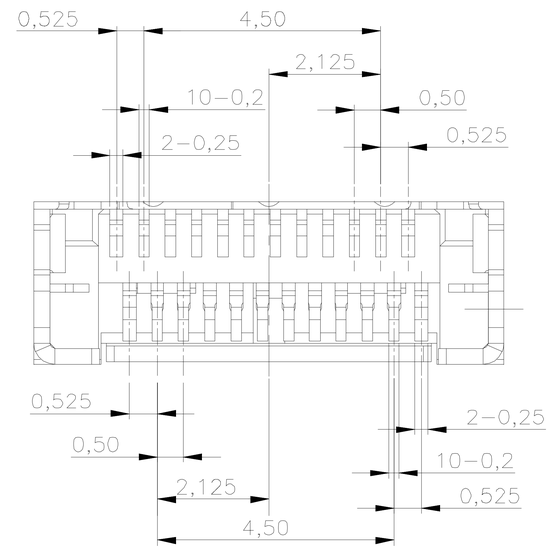

DETAIL C(SCALE 2:1)

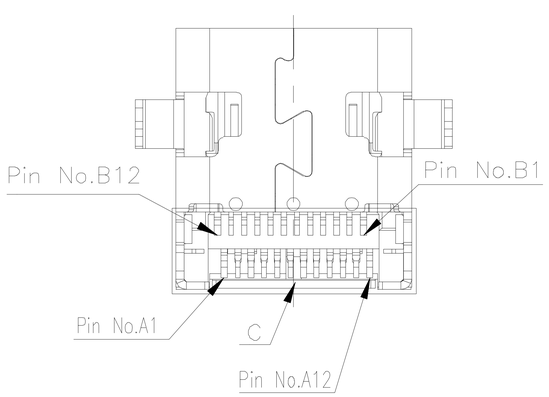

ElectronicLinks international inc

DESIGNED BY:	SDR	02JUN05
CHECKED BY:	XXX	DD/MM/YY
APPROVED BY:	XXX	DD/MM/YY

UNLESS OTHERWISE NOTED: DIMENSIONS IN MM

MATERIAL: AS NOTED

FINISH: AS NOTED

LINEAR	X.X = ±0.1 X.XX = ±0.05 X.XXX = ±0.025 X.XXXX = ±0.0125	
ANGLES ±		0.2°
EDGE/CORNER BREAKS	OUTSIDE MAX.	0.5
	INSIDE MAX.	0.15

USB 3.1 TYPE C RECEPTACLE (Mid-Mount Dual-Row SMT)

SIZE	REV LEVEL	PART NO.
C	A	
SCALE NONE		SHEET 1 of 1